NOTES - (UNLESS OTHERWISE SPECIFIED)
1. ALL DIMENSIONS IN INCHES [mm].
2. DIMENSIONING AND TOLERANCING PER ASME Y14.5M.

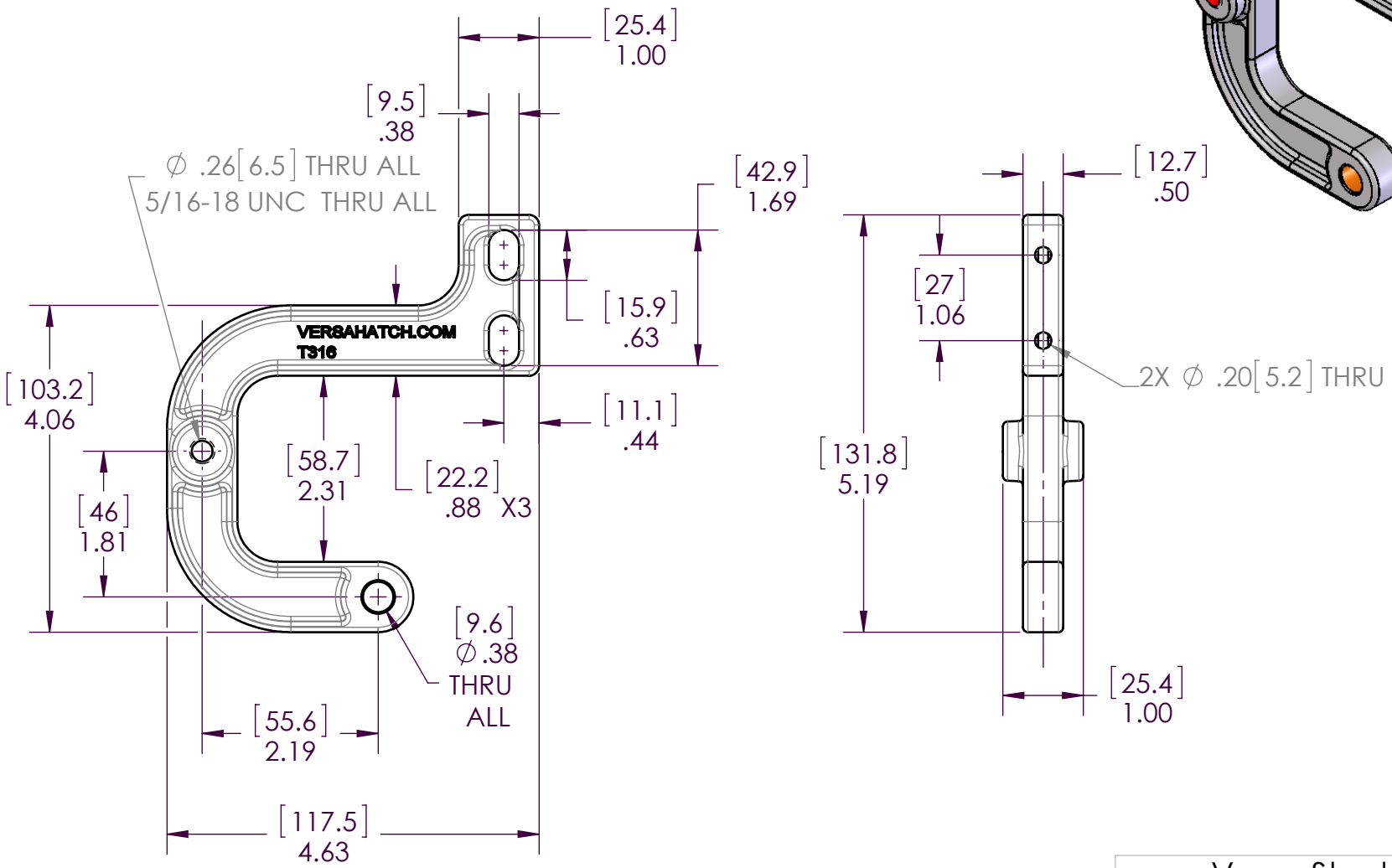

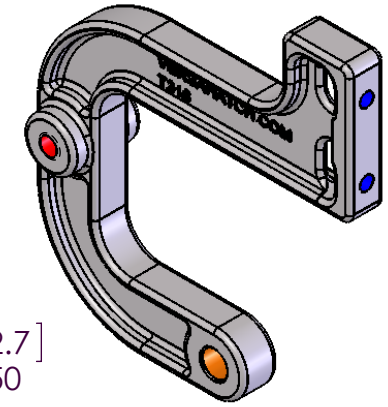

Versa-Steel, Inc
Portland, Oregon USA
Ph 503-287-9822
ss-hinges.com

MATERIAL: AISI 316 CAST	**PROPRIETARY AND CONFIDENTIAL**	Description: HINGE, ARTICULATED, CAST 316
FINISH: SATIN	THE INFORMATION CONTAINED IN THIS DRAWING IS THE SOLE PROPERTY OF VERSA-STEEL, INC. ANY REPRODUCTION IN PART OR AS A WHOLE WITHOUT THE WRITTEN PERMISSION OF VERSA-STEEL, INC. IS PROHIBITED.	PART#: 1001018 REV.
DO NOT SCALE DRAWING		SIZE A WEIGHT: 1 LBS